ASKO
Inspired by Scandinavia

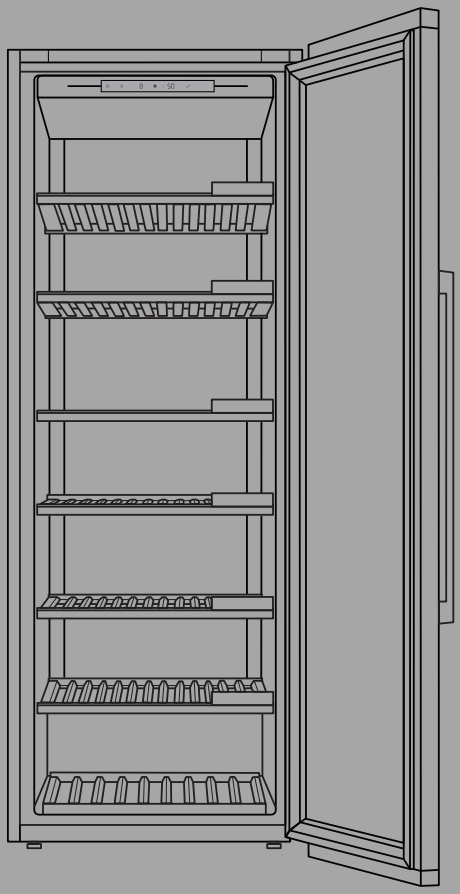

INSTRUCTIONS FOR USE

WCN111942G

WINE CLIMATE CABINET

EN

Contents

Introduction 3
Welcome to our growing ASKO family! 3
Safety instructions 4
Safety of children and vulnerable people 4
General safety 5
Installation 5
Electrical connection 6
Use 7
Care and cleaning 8
Disposal 9
Installation and connection 10
Selecting the location 10
Appliance placement 11
Connecting the appliance 14
Before using the appliance for the first time 15
Before you use the appliance for the first time 15
Energy-saving advice 15
Storing wine 16
Wine storage tips 16
Storing bottles 17
Description of the appliance 18
Operation 25
Display 25
First plug-in 26
Temperature setting 27
Appliance Display Standby 27
Key lock mode 27
Alarms 28
SETTINGS MENU 32
Wi-Fi function 45
Charcoal filter countdown and notification ... 47
Sabbath mode 47
Eco mode 48
Maintenance 49
Defrosting the appliance 49
Cleaning the appliance 49
Reversing the door opening direction 50
Solving problems 58
Tips & Tricks 58
Error notifications 59
General problems 61
Other display warnings 62
Environmental aspects 64
Disposal of packaging and appliance 64

Welcome to our growing ASKO family!

We are proud of our appliances. We hope that this appliance will be an appreciated and dependable aid for many years to come.

Please read the operating instructions before use. They include general tips, information about the settings and adjustments you can make, and the best way to take care of your appliance.

Link to the EU EPREL database

For European markets only

The QR code on the energy label supplied with the appliance provides a web link to the registration of this appliance in the EU EPREL database. Keep the energy label for reference together with the user manual and all other documents provided with this appliance. It is possible to find information related to the performance of the product in the EU EPREL database using the link https://eprel.ec.europa.eu and the model name and product number that you can find on the rating plate of the appliance. For more detailed information about the energy label, visit www.theenergylabel.eu.

The following symbols are used throughout the manual and they have the following meanings:

INFORMATION!

Information, advice, tip, or recommendation

WARNING!

Warning – general danger

ELECTRIC SHOCK!

Warning – danger of electric shock

DANGER OF FIRE!

Warning – danger of fire

Before the installation and use of the appliance, carefully read the supplied instructions. The manufacturer is not responsible if an incorrect installation and use causes injuries and damages. Always keep the instructions with the appliance for future reference.

⚠ WARNING!

If the appliance is installed at an altitude of over 1000 m above sea level, there is a danger of glass cracking due to air pressure. In such case, glass fragments could cause injury.

Safety of children and vulnerable people

- The appliance is not intended for use by persons (including children) with reduced physical, sensory or mental capabilities, or lack of experience and knowledge, unless they have been given supervision or instruction concerning use of the appliance by a person responsible for their safety.
- Children should be supervised to ensure that they do not play with the appliance.
- Cleaning and user maintenance shall not be made by children without supervision.
- Keep all packaging away from children.

For European markets only

- This appliance can be used by children aged from 8 years and above and persons with reduced physical, sensory or mental capabilities or lack of experience and knowledge if they have been given supervision or instruction concerning use of the appliance in a safe way and understand the hazards involved.
- Children shall not play with the appliance.
- Cleaning and user maintenance shall not be made by children without supervision.
- Children aged from 3 to 8 years are not allowed to load and unload the appliance.

General safety

- Illumination in the appliance is only suitable for illumination of this appliance and not for household room illumination.
- WARNING! This appliance is intended to be used in household and similar applications such as:
  - staff kitchen areas in shops, offices and other working environments;
  - farm houses and by clients in hotels, motels and other residential type environments;
  - catering and similar non-retail applications.

⚠ WARNING!

Keep ventilation openings, in the appliance enclosure or in the built-in structure, clear of obstruction.

Do not use mechanical devices or other means to accelerate the defrosting process, other than those recommended by the manufacturer.

Do not damage the refrigerant circuit.

Do not use water spray and steam to clean the appliance.

Clean the appliance with a moist soft cloth. Only use neutral detergents. Do not use abrasive products, abrasive cleaning pads, solvents or metal objects.

Do not store explosive substances such as aerosol cans with a flammable propellant in this appliance.

If the supply cord is damaged, it must be replaced by the manufacturer, its service agent or similarly qualified persons in order to avoid a hazard.

Installation

- Remove all the packaging.
- Do not install or use a damaged appliance.

- Obey the installation instruction supplied with the appliance.
- Always be careful when you move the appliance because it is heavy. Always wear safety gloves.
- When tilting the appliance, make sure the door does not touch the floor. The door glass pane is sensitive, especially to any lateral impact (i.e. impact from the side, on the edge of the door).
- Make sure the air can circulate around the appliance.
- After you place the appliance, wait at least 4 hours before connecting the appliance to the power supply. This is to allow the oil to flow back in the compressor.
- Do not install the appliance close to radiators or cookers, oven or hobs.
- Do not install the appliance where there is direct sunlight.
- Do not install this appliance in areas that are too humid or too cold, such as the construction appendices, garages or cellars.
- When you move the appliance, lift it by the front edge to avoid scratching the floor.
- Never move or lift the appliance by applying force on the door handle.

⚠ ELECTRIC SHOCK!

WARNING! When positioning the appliance, ensure the supply cord is not trapped or damaged.

Electrical connection

⚠ ELECTRIC SHOCK!

WARNING! Risk of fire and electrical shock.

- The appliance must be earthed.
- All electrical connections should be made by a qualified electrician.

- Make sure that the electrical information on the rating plate agrees with the power supply. If not, contact an electrician.
- Always use a correctly installed shockproof socket.
- Do not use multi-plug adapters and extension cables.
- Make sure not to cause damage to the electrical components (e.g. mains plug, mains cable, compressor). Contact the Service or an electrician to change the electrical components.
- The mains cable must stay below the level of the mains plug.
- Connect the mains plug to the mains socket only at the end of the installation. Make sure that there is access to the mains plug after the installation.
- Do not pull the mains cable to disconnect the appliance. Always pull the mains plug.

⚠ WARNING!

Do not locate multiple portable socket-outlets or portable power supplies at the rear of the appliance

Use

⚠ WARNING!

Risk of injury, burns, electrical shock or fire.

- Do not change the specification of this appliance.
- Do not put electrical appliances (e.g. ice cream makers) in the appliance unless they are stated applicable by the manufacturer.
- Be careful not to cause damage to the refrigerant circuit. It contains isobutene (R600a), a natural gas with a high level of environmental compatibility. This gas is flammable.
- If damage occurs to the refrigerant circuit, make sure that there are no flames and sources of ignition in the room. Ventilate the room.
- Do not let hot items to touch the plastic parts of the appliance.

- Do not store flammable gas and liquid in the appliance.
- Do not put flammable products or items that are wet with flammable products in, near or on the appliance.
- Do not touch the compressor or the condenser. They are hot.

Care and cleaning

⚠ WARNING!

Risk of injury or damage to the appliance.

- Before maintenance, deactivate the appliance and disconnect the mains plug from the mains socket.
- This appliance contains hydrocarbons in the cooling unit. Only a qualified person must do the maintenance and the recharging of the unit.

Disposal

⚠ WARNING!

Risk of injury or suffocation.

- Disconnect the appliance from the mains supply.
- Cut off the mains cable and discard it.
- Remove the door to prevent children and pets to be closed inside of the appliance.
- The refrigerant circuit and the insulation materials of this appliance are ozone friendly.
- The insulation foam contains flammable gas. Contact your municipal authority for information on how to discard the appliance correctly.
- Do not cause damage to the part of the cooling unit that is near the heat exchanger.

Selecting the location

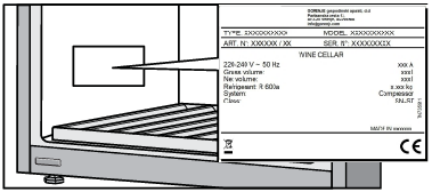

Place the appliance in a dry and well aired room. The permitted ambient temperature range for the appliance depends on the appliance's climate class, which is shown on the type plate.

⚠ WARNING!

Do not place the appliance in a room where the temperature can fall below 5 °C: the appliance may not work properly or become defective!

Description	Class	Ambient temperature range °C	Relative humidity
Extended temperate	SN	+10 to +32	≤75%
Temperate	N	+16 to +32	
Subtropical	ST	+16 to +38	
Tropical	T	+16 to +43	

- In environments with high humidity level, condensate droplets may appear on the appliance's exterior surfaces.
- If the appliance is installed in a dry environment, we recommend to use humidity box included in the appliance.

⚠ WARNING!

Install the appliance in a room with an adequate amount of air. There should be at least 1 m^3 of air per every 8 grams of refrigerant. The amount of refrigerant is indicated on the rating plate inside the appliance.

⚠ WARNING!

Do not place the appliance in a room where temperature can drop to below 5°C. In such environment, the appliance may not operate correctly, or it may become defective.

⚠ WARNING!

The appliance is not suitable for outdoor use and it may not be exposed to rain.

Appliance placement

Appliance installation should be carried out by at least two persons, in order to avoid damage to the appliance and physical injury of anyone involved.

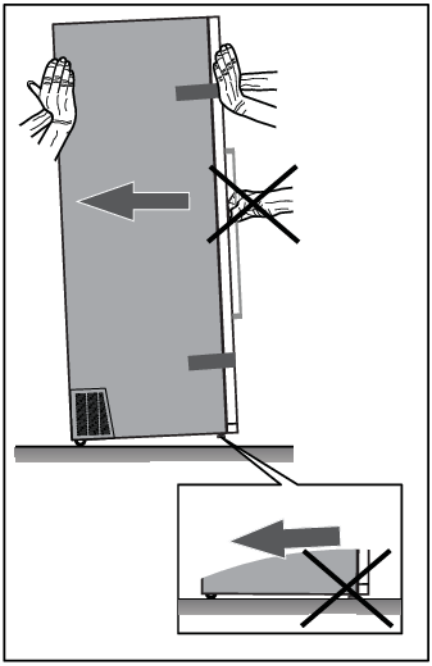

When moving the appliance, be careful not to push it on the floor because of potential damages. There are two casters on the back of the appliance housing, that make moving the appliance around easier.

In order to safely install the appliance and for the appliance to operate correctly, it is important to place it onto a surface with adequate load-bearing capacity. If necessary, consult an architect/ structural engineer. The surface should be smooth and level with the floor in the room.

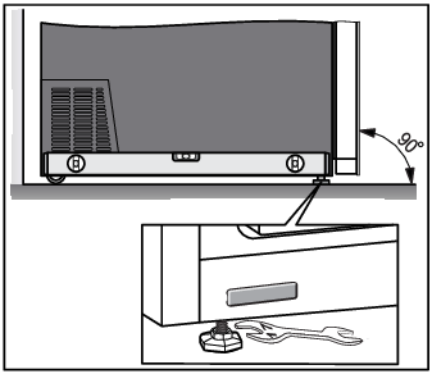

The weight of an empty appliance is approximately 138 kg.

The weight of a fully loaded appliance is approximately 475kg.

When the appliance is placed on the intended surface, it should be completely level in order to decrease vibration. To level the appliance, use the adjustable feet at the front of the appliance. An open wrench size 17 is required for adjusting and fastening the feet.

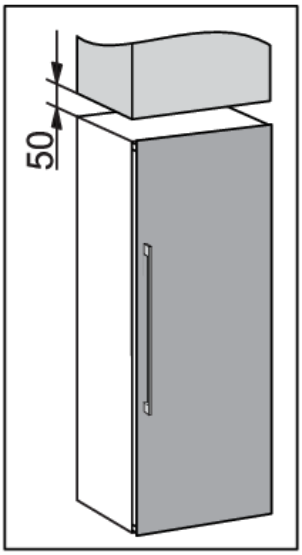

- Place the appliance at least 50 mm away from an electric or gas stove, and at least 300 mm away from a heat source (e.g. a radiator or a heater). If such clearance is not possible, then install an insulation panel.
- Do not expose the appliance to direct sunlight.
- We recommend free-standing installation of the appliance. When necessary, it can also be placed adjacent to cabinetry, if adequate ventilation and cooling of the installation location (e.g. air-conditioning) are provided. In such a case, the appliance power consumption is likely to increase.
- There has to be a clearance of at least 50 mm between the appliance and any cabinet above it.

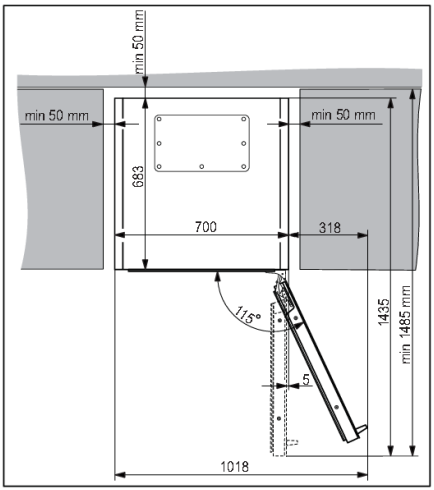

- To allow for adequate ventilation and cooling of the appliance, there has to be sufficient clearence behind the appliance and on both sides as well (at least 50 mm). Please, also observe the clearance required to fully open the door in order to allow pulling out the drawers and shelves (see installation diagram).
- In cases of installation where there is less than 50 mm of space around the cabinet, a recess must be made at the ventilation grilles on both sides of the appliance (ventilation grilles must not be blocked) which must be able to supply or exhaust air on each side through an opening of at least 200 cm^2.

  Furthermore, the 50 mm distance from the rear wall must always be maintained and must be connected to an opening above or behind the cabinet.

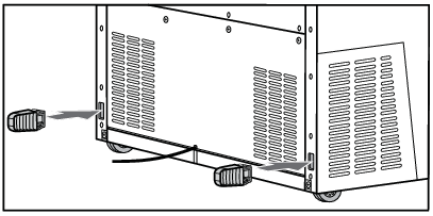

- The appliance comes supplied with two spacers that should be fitted in the slots on the back of the appliance, one on either side, near the bottom. The spacers ensure adequate air circulation that is required for correct appliance operation. The appliance will operate normally without the spacers in place; however, this could affect its power consumption.

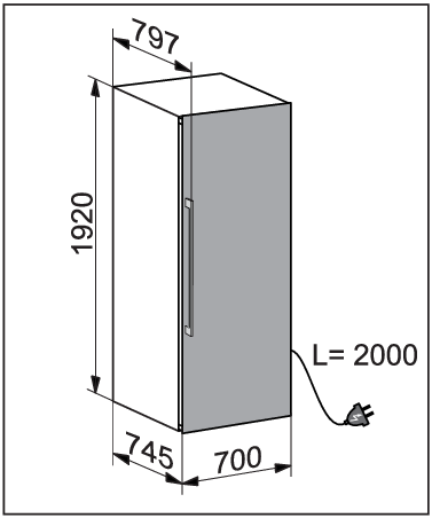

- Appliance dimensions are shown on the drawing.

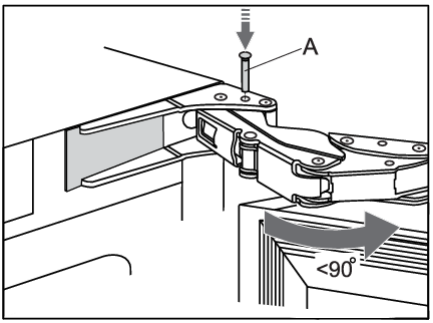

- If the appliance is placed in a way that does not allow the door to be opened to the 115° angle, the opening angle can also be restricted to 90°. In this case, use the door restrictors (A) supplied in the bag containing the instruction manual. Carefully open the door to an angle less than 90° and insert the restrictor into the provided opening in the lower hinge. Repeat the same process for the upper hinge. When inserting the restrictor into the hinge, you may also use a small hammer.
- When the appliance is installed, its plug should always be accessible!
- This appliance is not intended to be used as a build-in appliance.

Connecting the appliance

- Connect the appliance to the power supply with a plug. The socket must be earthed. The nominal voltage and frequency required for the appliance are shown on the appliance's type plate/label with basic information.
- The appliance must be connected to the mains and earthed in accordance with the prevailing standards and regulations. The appliance can withstand small variations in the mains voltage to a maximum of plus or minus 6%.

⚠ WARNING!

When you are not going to use the appliance for a longer period then switch it off (with function ON/OFF) and disconnect it from the mains. Empty and clean the appliance, than leave the door ajar.

Before you use the appliance for the first time

Do not connect the appliance to the mains until you have carefully read the instructions for the correct and safe use of the appliance. We recommend that you keep these instructions for future use. If you sell the appliance, enclose them with the appliance.

Inspect the appliance for damage and/or irregularities. If the appliance is damaged, contact the store that sold you the appliance.

Allow the appliance to stand upright for at least 4 hours before you connect the appliance to the mains. This reduces the risk of malfunctions resulting from transport effects on the refrigerant unit.

Before using the appliance for the first time, the interior and all internal accessories should be cleaned with lukewarm water and a neutral cleaning agent. Wipe the cleaned parts with a cloth with clean water and then dry them thoroughly.

Clean the wooden parts with a damp cloth. Make sure the wood is not too wet and leave the parts to fully dry before returning them to the appliance.

Energy-saving advice

- Install the appliance as stated in the instructions for use.
- Continuous use of ECO mode is recommended.
- Do not open the door more than necessary.
- Do not cover or block the ventilation slots.
- Replace a damaged door gasket or a gasket that no longer provides a perfect seal as soon as possible.
- When placing bottles on the shelves, make sure the air can freely circulate around them (observe the recommendations from the instruction manual and do not place more bottles on the shelves than recommended or indicated).
- In case of a power supply failure, leave the door closed as long as possible to maintain the temperature inside the appliance.

Wine storage tips

Natural wine cellars are the ideal place to store wine, because of the scarce light, the lack of vibrations and having a special climate. A wine's temperature determines its flavour, and influences enjoyment. Wine ageing depends on the environment conditions in which the wine is stored. By maintaining constant optimum temperature, correct air humidity, and an atmosphere free from any odours, the wine climate cabinet provides excellent conditions for storing your wine. It also provides an environment free from harmful vibrations that could also affect the ageing process. Since every type of wine has an optimum ageing time and climate, we suggest checking the recommended time to open the bottle as advised by the winemaker.

Most people who drink wine, know you serve white wine and champagne chilled, and red wine on room temperature. What people may not know that the "room temperature" that wine professionals are referring to, is the temperature of wine caves in the Bordeaux region of France. Those caves are about 13°C. A good wine climate cabinet, can keep your wines at a perfect serving temperature, reducing the guesswork and sometimes the headache.

It is very important to maintain a constant temperature within the wine climate cabinet. In case of a power failure, open the door as little as possible to maintain the temperature in the appliance interior. A gradual increase in temperature will not have a negative impact on the wine.

The humidity should be between 50% and 80%. Too low humidity will result in a dry cork. Too high humidity will cause mold. The ASKO Wine Climate Cabinet provides excellent ventilation with clean air which helps preventing damage to labels and corks during storage.

The humidity levels in wine climate cabinet are particularly important for long term wine storage and ageing. Recommended temperature for wine ageing is between 11°C and 13°C. For that purpose, the wine climate cabinet will maintain optimal ageing conditions and notify the user, if the conditions deviate from them. Extremely high and low temperature settings are intended mainly for the wine serving purposes. Wine is exposed to this conditions for shorter time periods and therefore humidity should not have any negative effect on the wine. However, monitoring of relative humidity levels is available regardless of the compartment temperature setting.

Major temperature changes can cause humidity levels to deviate from the desired levels and it may take longer, e.g. about a week, for them to stabilize again. During this time, the notifications for humidity out of zone will not appear.

Wine should be stored horizontally, especially corked wines. It will keep the cork moist and swollen and prevent wine from unwanted contact with air. Short term storage, within some weeks, storing in tilted position is preferred to keep the cork damp. If the position is too upward, the cork will dry out. Screw and crown caps have less demands regarding the positioning.

The wine cabinet is fitted with an activated carbon filter which prevents odors that can pollute your wines. The Activated Carbon filter is originally called HEGA filter (High Efficiency Gas Absorption). It removes the gas molecules through a process of adsorption (not absorption). During adsorption, the pollutants stick to the outside of the Activated Carbon filter.

By having your own wine climate cabinet in your house, this creates enjoyment of your wine on a premium level like the wine came straight out of a real wine cellar.

Storing bottles

- Moving the bottles or excessive vibration can have a negative effect on the aging process and thus on the wine's flavour. The appliance is fitted with a special sensor that continuously measures vibration. In case of excessive vibration, e.g. when the appliance door is slammed shut, an alarm signal will sound and alarm key will flash on the display.
- Keep the bottles intended for daily use on the front half of the shelves. Keep the wines you intend to store for a long time or age in the bottom part of the cabinet.
- Store the bottles horizontally, so that cork stoppers are also kept moist from within.

INFORMATION!

Mould can appear on bottle labels; this depends on the type of glue used for the label. Clean the bottles and remove any residual glue.

INFORMATION!

White sediment can form on cork stoppers as a result of oxidation due to contact with air.

Wipe the sediment with a dry cloth. The sediment does not affect the quality of the wine.

This product contains a light source of energy efficiency class <G>.

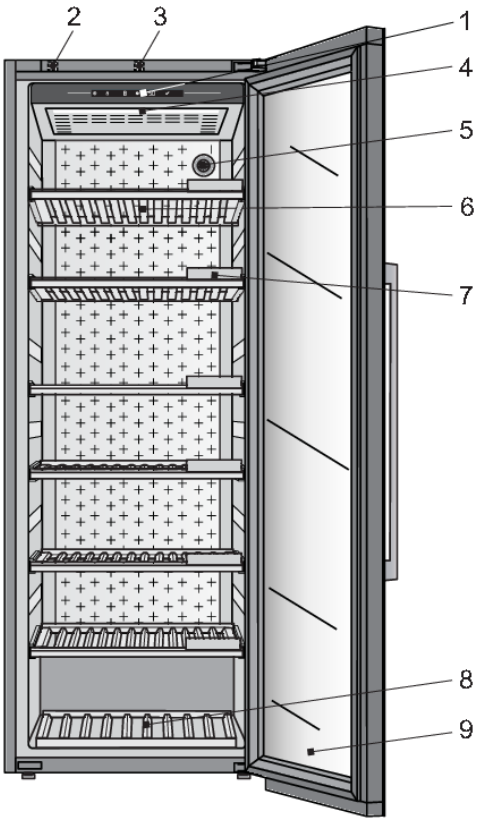

1. Control panel
2. Proximity sensor
3. Door sensor
4. LED illumination
5. Charcoal filter
6. Wooden bottle shelf
7. Chalkboard name tag
8. Wooden bottom bottle rack
9. 3-layered glass door with UV filter

Control panel (1)

By pressing the keys on display unit, you can control the operation of the wine climate cabinet and set certain functions according to your preferences.

Proximity sensor (2)

When you are within a particular range of the appliance and the door is closed, proximity sensor will provide feedback according to your preferences. They can be set in SETTINGS MENU.

If proximity sensor is ‘On’:

- Light change to (no change, ambient mode or functional mode)
- Display change to (no change, status screen)

Door sensor (3)

When you open or close the appliance door, light will change according to your preferences. They can be set in SETTINGS MENU.

- Door open: light change to (no change, ambient mode or functional mode)
- Door closed: light change to (no change, ambient mode or functional mode)

Door sensor error is detected, when door open time reaches 10 minutes. In that case light is turned off.

LED illumination (4)

LED illumination is installed on the appliance ceiling. Owing to the use of LED illumination, the wine will not be exposed to UV rays and heat. The intensity, color and time interval of LED illumination can be changed in SETTINGS MENU.

Two light modes can be set and saved to use in different situations: **Ambient mode** and **Functional mode**.

Ambient mode: its purpose is to blend into the living space ambiance. It will be activated when the door is closed (default).

Functional mode: its purpose is to provide a clear view on the shelves. It will be activated when the door is opened (default).

Each light mode consists of a combination of intensity and warmth. These settings can be changed to your preferences. Light color can be changed in range of 2700K-5000K, light intensity can be set from 0% to 99%

The activating and deactivating of the modes in different situations can be set in SETTINGS MENU.

Priorities for lights control settings

Priority	
1.	Switch light function – it overrides all other light settings, can only be triggered from **ConnectLife** mobile application.
2.	Door sensor
3.	Proximity sensor

Charcoal filter (5)

Fresh air is drawn into the appliance interior through active charcoal air filter. This ensures freshness, as well as absence of dust and odours. The fan then distributes the air evenly across the appliance interior.

Replace the air filter approximately every 12 months. A notification will appear on the display to remind you it is time to replace the filter.

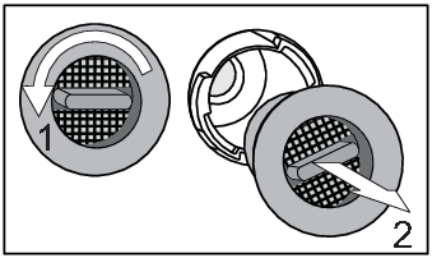

To replace the air filter:

1. Rotate the filter in the anti-clockwise direction (1) and pull it out from the appliance.
2. Insert a new filter into the filter slot and rotate it clockwise until it clicks into place.

INFORMATION!

Charcoal air filter can be ordered as accessory.

For more informations refer to the local Asko dealer or to the Asko website of your country.

Wooden bottle shelf (6)

The shelves are placed on the plastic holders that are attached to the appliance cabinet.

INFORMATION!

Before removing any shelf from the appliance, the shelf should be completely empty.

Make sure the door is fully open before removing the shelves. This will prevent any damage to the door gasket.

Be careful when pulling out the wooden shelves. Carefully pull out and push back the wooden shelves in order not to expose the wine bottles to vibration.

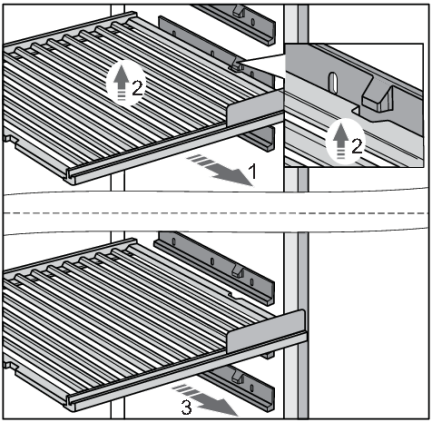

To remove a shelf from the appliance, partly pull it towards you (1) until the two grooves on the shelf and the block on the plastic shelf supports are aligned. Then, lift the shelf (2) and pull it out from the appliance (3). Take care not to damage the door gasket.

To replace the shelf, proceed with the same steps in the opposite direction.

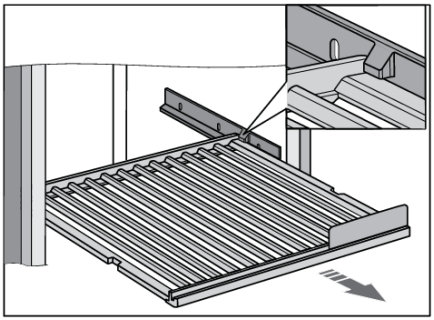

The shelf can also be partly pulled out from the appliance. The blocks on the plastic shelf supports protect the shelf from being fully extended and pulled out, which could result in the shelf falling from the appliance.

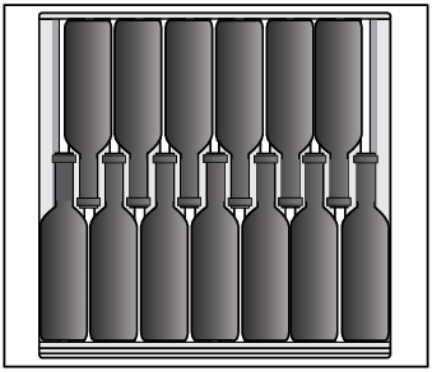

INFORMATION!

Before you start adding bottles to a shelf, check once more whether the shelf is correctly placed on the plastic holders. Up to 13 Bordeaux bottles (0.75 l) can be placed on each standard wooden bottle shelf.

INFORMATION!

Higher humidity level inside the appliance may cause the wooden parts to slightly bend; this, however, will not affect their functioning.

Chalkboard name tag (7)

Chalkboard name tags are supplied with the appliance. They can be installed at the front side of each shelf. You can use chalk to indicate the wine stored on a particular shelf. The chalkboard name tags can be wiped with a damp cloth.

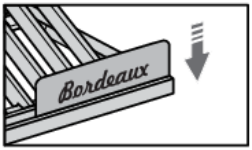

Wooden bottom bottle rack (8)

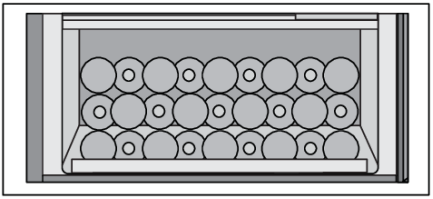

The wooden bottom bottle rack is intended for storing the bottles in the compressor area. This area is suitable for storing bottles you wish to keep for a longer period of time, especially for ageing without excessive vibration and unnecessary movement. Up to 27 Bordeaux bottles (0.75 l) can be stored on the wooden bottom bottle rack.

3-layered glass door with UV filter (9)

The 3-layered glass door is filled with argon (a noble gas), which makes them more energy efficient. For maximum protection from sunlight that can harm the wine's aging process, an additional UV film is used that stops 99% of sunlight.

The door closes automatically when the opening angle is less than 20°. The soft-close mechanism gently closes the door.

Humidity box

One HumidityBox is supplied with the wine climate cabinet.

The purpose of this humidity box is to increase humidity of the Wine Climate Cabinet, to prevent humidity to drop under 50% that can appear in certain conditions (when the Wine Climate Cabinet is placed in an environment with low humidity).

You can monitor on the appliance display if there is low humidity (a notification will be given when humidity reaches 50% and an alarm when it reaches 40%).

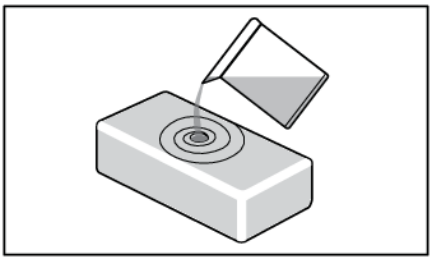

You can fill the box with 0,5 liter of water and place it in the cabinet.

HumidityBox is made of clay, a natural material with the right characteristics to first absorb water and then allow it to evaporate to increase humidity.

The walls and bottom of the clay box are glazed to prevent water leakage. Water is absorbed by all walls, but will only evaporate through the unglazed top surface.

The HumidityBox is made in an artisan workshop with fine craftmanship. As a result, minor irregularities in material or shape may occur. They, however, do not have any effect on functionality.

The colour of the box changes when it is filled with water: as the walls absorb water, they become darker. Depending on the hardness of your tap water, some white limescale stains may appear on the material. To avoid this, you may use descaled or distilled water. The white stains can be washed off.

After placing the HumidityBox in the correct zone, it will take approximately 9 hours to increase the humidity back from 40% to 50%. After 9 hours, humidity will continue to slowly increase.

On average, the HumidityBox should be refilled every 30 days. The appliance will sound an alarm when humidity gets too low (below 40%).

You can also buy additional HumidityBoxes when needed.

Please do not put the HumidityBox in the dishwasher, as this type of material is not dishwasher safe. Because of the relatively thin walls, the box is fragile and should be handled carefully. Occasionally, shower the inside of the box with tap water.

INFORMATION!

For more informations refer to the local Asko dealer or to the Asko website of your country.

Appliance capacity

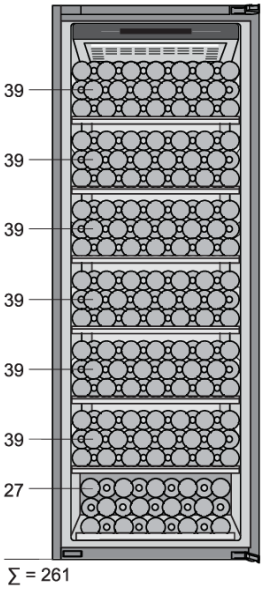

The basic appliance configuration allows storing up to 261 Bordeaux bottles.

The number of bottles you can load onto each shelf is indicated on the drawing.

Side-by-Side kit

There is a possibility to place two appliances side-by-side.

To ensure the proper fitting and long-lasting operation of two appliances put in side-by-side installment, the dedicated kit should be used. Using the dedicated side-by-side kit will ensure exact alignment, stabilization, and eliminate the possibility of excessive condensate accumulation between adjacent appliances.

For safety reasons, side-by-side kit should only be installed by an authorized service technician!

INFORMATION!

For more informations refer to the local Asko dealer or to the Asko website of your country.

Display

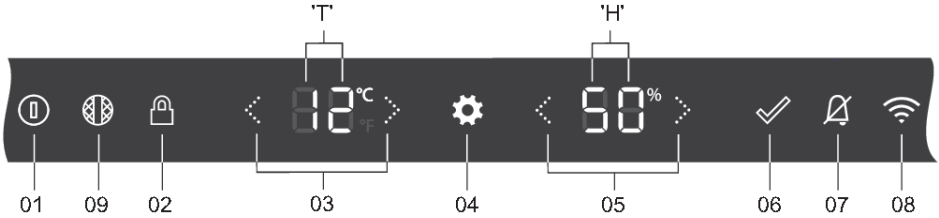

01	On/Off key: • a long press (2 seconds) to switch the appliance on or off • a short press to switch the appliance to or from Standby
02	Key lock key – to lock or unlock the user interface (3 seconds press)
03	Temperature arrows: • to increase or decrease the set temperature • to toggle through menu options inside SETTINGS MENU
04	Settings key – to go to SETTINGS MENU
05	Value arrows – to select preferred setting or value inside SETTINGS MENU
06	Confirmation key – to confirm setting from SETTINGS MENU
07	Alarm key – to deactivate alarms
08	Wi-Fi key – shortcut to go inside NETWORK CONNECTION inside SETTINGS MENU
09	Charcoal filter key - shortcut to go inside SYSTEM **'Charcoal filter countdown'** inside SETTINGS MENU
'T'	Temperature display
'H'	Humidity display

INFORMATION!

For the best response, press the keys with the main part of your fingertip .

Whenever you press the key, a short tone will sound. Volume of the key sound can be set in SETTINGS MENU.

Keylights intensity depends on the availability of the certain function:

	Keylight intensity with door closed or opened
Function **not available**	0%
Function **available**	60%
Function **activated or to be activated**	100%

First plug-in

INFORMATION!

When the appliance is plugged in for the first time or after the appliance was disconnected from the mains for a longer period of time it is mandatory to wait four hours until the appliance can be activated.

Appliance-Off is the default state of the appliance. After the appliance is plugged in to the power supply, it is still Off. To indicate that the power cord is attached to the electricity On/Off key is blinking softly . **Display is still inactive.**

Appliance-On is normal control state of the appliance.

Appliance is switched on with a 2 seconds press on On/Off key .

The appliance will start cooling with default setpoint temperature.

The display will switch to Status display, which is like the 'HOME' page of the appliance.

All functions and control modes are operating according to what is set in SETTINGS MENU. In SETTINGS MENU you can see how to adjust each one of them and it can also be done through the mobile application (refer to chapter “SETTINGS MENU“).

Status display: door open

Status display: door closed

Pressing on On/Off key for 2 seconds again, switches the appliance off.

Temperature setting

Default setpoint temperature of the appliance is 12°C. This temperature can be changed instantly in Status display, after the appliance is switched on.

Temperature of the appliance compartment can be set between: 5°C and 20°C.

By pressing on the arrow keys, setpoint temperature on display 'T' changes. With every press, setpoint temperature will change 1°C up or down. The setpoint temperature is saved 2 seconds after the last press on temp-up or temp-down key.

When highest setpoint temperature is reached, increasing arrow key is inactive and next press is ignored.

Vice versa reaction occurs when lowest set point temperature is reached.

Appliance Display Standby

Appliance Display Standby is a mode that display enters for optimal power consumption. Appliance cooling system is operating normal.

Appliance Display Standby activation:

- with a short press on On/Off key ,
- automatically, after a certain time of inactivity (standby time). It can be set in SETTINGS MENU.

It can not be activated in case of any errors detected and in case of opened door.

If Appliance Display Standby mode is active, it will end:

- by opening the door,
- by a short press on any key,
- when error indication is displayed on display,
- when proximity sensor detects movement, exception: if in SETTINGS MENU/ PROXIMITY AND DOOR SENSOR/ Display changes to/ No change is selected.

When this mode ends, the appliance goes back to Status display.

Key lock mode

When Key lock mode is activated, it is not possible to switch off the appliance or to change any setting. Appliance cooling system is operating normal. Settings can be changed only from **ConnectLife** mobile application. Your preferences on proximity and door sensor, light and display actions will be executed.

Key lock mode activation:

- with a 3 seconds press on Key lock key ,

- automatically, after a certain time of inactivity. It can be set in SETTINGS MENU.

Status display: Key lock key active, door open

If you press on any other key, Key lock key will blink fast, 2 times. Press on any other key is ignored.

Exeption: In case that any of the alarms is triggered, short press on alarm key will cancel the alarm.

Key lock mode deactivation:

- with a 3 seconds press on Key lock key .

Alarms

Please refer also to chapter "Tips & Tricks" to learn more about possible reasons for each particular alarm.

Temperature alarm

Temperature alarm sounds when the temperature in the appliance is out of range, for 3 hours constantly. This means 3°C above or 3°C below the setpoint temperature.

The alarm key and setpoint temperature are blinking.

INFORMATION!

Every time the appliance is switched on again, it takes a while until the correct temperature is reached. For this reason, the alarm is disabled for the first 6 hours after the appliance is switched on to prevent the unnecessary activation of the alarm. Each time the door is closed, temperature alarm is blocked for 3 hours.

If the difference between old setpoint and new setpoint is:

- less than 5°C, it has no influence on temperature alarm,
- between 5 and 10°C, temperature alarm is blocked for 24h,
- higher than 10°C, temperature alarm is blocked for 80h.

Stopping the alarm:

Short press on alarm key will stop the alarm from sounding, alarm key is not illuminated anymore. Setpoint temperature continues to blink while the temperature is still out of range. If the temperature is within range and temperature alarm is active, it will be canceled automatically.

Humidity

Humidity can be (de)activated in SETTINGS MENU. If it is set to 'OF', then humidity is no longer being monitored (not in the appliance and not in the mobile app). Display 'H' does not show any value and automatically humidity alarm and humidity box refill notification are disabled.

Humidity alarm sounds when 7 days average value of compartment humidity falls below 40% or rises above 80%, for 7 days constantly.

The alarm key is illuminated and alarm sound is heard. On press of alarm icon the alarm is removed. Humidity value is blinking rapidly .

INFORMATION!

Every time the appliance is switched on, it takes a while until the correct humidity is reached. For this reason, the alarm is disabled for the first 24 hours after the appliance is switched on to prevent the unnecessary activation of the alarm. Each time the door is closed, humidity alarm is blocked for 6 hours.

If the difference between old setpoint and new setpoint is less than 5°C, it has no influence on humidity alarm.

If setpoint temperature for any compartment is set above or equal to 16°C, humidity alarm is neglected.

Stopping the alarm:

Short press on alarm key will stop the alarm from sounding, alarm key is not illuminated anymore.

Humidity value continues to blink while the humidity is still out of range.

If humidity value reestablishes between 40% and 80% and humidity alarm is active , it will be canceled automatically.

Humidity box notification

The appliance can notify you when humidity box needs to be refilled. Humidity box notification starts when 7 days average value of compartment humidity is between 40% - 50% for 7 days constantly. So you do not have to remember to check it yourself and can also help avoid triggering the humidity alarm.

The alarm key and humidity value are blinking softly . No alarm sound is heard.

Humidity box notification can be (de)activated in SETTINGS MENU. So if you do not have a humidity box or you prefer to check the humidity box yourself, it can be set to 'OF', then humidity box notification alarm is not active.

INFORMATION!

Every time the appliance is switched on, it takes a while until the correct humidity is reached. For this reason, the notification is disabled for the first 24 hours after the appliance is switched on to prevent the unnecessary activation of the notification. Each time the door is closed, humidity notification is blocked for 6 hours.

If the difference between old setpoint and new setpoint is less than 5°C, it has no influence on humidity notification.

Stopping the notification:

Short press on alarm key will cancel humidity box notification, alarm key is not illuminated anymore but humidity value continues to blink until value goes between 50% and 80%.

If humidity value reestablishes between 50% and 80% and humidity box notification is active, it will be canceled automatically.

Vibrations notification

If light vibrations are detected, light vibrations alarm is triggered. 'UA' is blinking softly on display 'T'.

Vibration has been noticed. Please close the door gently and pull-out /close the shelves gently, making use of the soft close mechanism. Frequent vibrations can influence the quality of the wine on longer term.

Vibrations alarm

If heavy vibrations are detected, heavy vibrations alarm is triggered. 'UA' is blinking rapidly on display 'T'.

Alarm key is blinking.

A considerable vibration has been noticed. Please look into the proper placing and calibration of the appliance. If it happens more often, please look into circumstances that can be cause of the vibrations.

Stopping the alarm

Short press on any key will stop the alarm from sounding. Blinking of the alarm key stays active.

If vibrations alarm is active and vibrations value is within range, then vibrations alarm is canceled automatically.

Open door alarm

Door alarm sounds and alarm key is blinking when the door is open for more than 3 minutes and there is no user interaction.

Short press on any key will stop alarm sounding and blinking of alarm key. If you do not close the door, the alarm will switch on again after 5 minutes.

Closing the door will stop the alarm.

Power outage high temperature alarm

If the electricity power in which the appliance is plugged in fails or outages then appliance stops cooling and temperature inside the compartment can be affected.

The power failure alarm is designed to alert after power is restored and appliance turned on that the temperature inside the compartment is out of range. If the temperature is not out of range, power failure alarm will not be triggered. When the appliance is in a place not frequently visited or you are away for a long time this alarm will help you be aware after restoring the appliance that the temperature of the bottles might have changed.

On displays 'T' and 'H' there is a 'PF' blinking.

Stopping the alarm:

Short press on alarm key will stop 'PF' blinking.

After that, current measured temperature and current humidity value will be shown on displays 'T' and 'H'.

If you press on alarm key again, alarm will be canceled. Compartment setpoint temperature and humidity level will be shown on displays 'T' and 'H'.

INFORMATION!

When **Power outage high temperature** alarm is canceled, **Temperature alarm** can be still active. In that case, alarm behaves like **Temperature alarm.**

SETTINGS MENU

Because the appliance has extensive setting options, a menu system was defined to provide access to all settings. As a default all settings are already set, so it is not necessary to go through SETTINGS MENU. But to adapt the appliance settings to your preferences it is possible to do so.

Enter SETTINGS MENU

You can enter SETTINGS MENU with a short press on the settings key .

First option in SETTINGS MENU will be shown.

Basic logic

GROUP NAME	**MENU option**	**According settings and values will be displayed**
8	8	*Options and values will be explained.*

The temperature display 'T' will be used to represent the GROUP NAME of menu options and the **MENU option** itself. There are 8 Groups of menu options: GENERAL, SOUNDS, DISPLAY, LIGHT, PROXIMITY AND DOOR SENSOR, NIGHT MODE, NETWORK CONNECTION, SYSTEM.

The humidity display 'H' will be used to represent the settings and values that can be selected. It differs per menu option how many or what kind of settings there are possible.

Arrows can be used to toggle through **MENU options.**

Arrows can be used to select the preferred setting or value.

Example

We will use the first option in SETTINGS MENU as an example:

First 'A' is representing MENU option Group: GENERAL.

Second 'A' is representing **Menu option**: Temperature unit.

Pressing the arrow key on the right of display 'H' will switch from 'C' representing °C to 'F' representing °F.

Confirm key will be illuminated to indicate a confirmation is needed.

If confirm key is not illuminated, the visible setting is activated.

Pressing the arrow key on the right of display 'T' will enter the next **MENU option**.

Exit SETTINGS MENU

You can exit the SETTINGS MENU with a short press on the settings key .

Settings menu ends automatically after 5 minutes without user interaction.

INFORMATION!

If SETTINGS MENU is active, the alarm indications (audio and visual), error notifications and Charcoal filter notifications are not active, they will be activated as soon as SETTINGS MENU is closed.

SETTINGS MENU is not activated again when, after failure, power is restored or when appliance goes back from Appliance-Off to Appliance-On.

In case of power failure, after power is restored, your settinngs will be set to values before power was disconnected.

SETTINGS MENU table

GENERAL A	**Temperature unit** A	**Select temperature unit:** C from °C to °F F
	Time hours b	**Select the hours of time:** 00 from 00 to 23 hours 23
	Time minutes C	**Select the minutes of time:** 00 from 00 to 59 minutes 59
	Date day d	**Select the day:** 01 from 01 to 31 days 31
	Date month E	**Select the month:** 01 from 01 to 12 months 12
	Date year F	**Select the year:** 00 from 00 up to 99 99

SOUNDS b	**General sounds** A	**Select the preferred volume:** 0 from 0 to 5 5	
	Alarm sounds b	**Select the preferred volume:** 0 from 0 to 5 5	
	Key sounds C	**Select the preferred volume:** 0 from 0 to 5 5	
DISPLAY C	**Standby time** A	**Time of inactivity after which display goes to standby:**	
		1	1 minute
		5	5 minutes
		15	15 minutes
		30	30 minutes
		60	60 minutes
		12	12 hours

LIGHTS d	Explanation about the light modes can be found in chapter **"LED illumination"**.		
	Ambient mode Kelvin A	**Select the first two digits of the Kelvin value:** 27 from 2700 to 5000 Kelvin 50	
	Ambient mode intensity b	**Select the light intensity:** 00 from 0 to 99 99	
	ON for C	**How long will the cabinet be lit in Ambient mode:**	
		01	1 minute
		05	5 minutes
		15	15 minutes
		30	30 minutes
		60	60 minutes
		90	90 minutes
		AL	always

LIGHTS	**Functional mode Kelvin**	**Select the first two digits of the Kelvin value:** 27 from 2700 to 5000 Kelvin 50	
	Functional mode Intensity	**Select the light intensity:** 00 from 0 to 99 99	
	ON for	**How long will the cabinet be lit in Functional mode:**	
		01	1 minute
		05	5 minutes
		15	15 minutes
		30	30 minutes
		60	60 minutes
		90	90 minutes
		AL	always

PROXIMITY AND DOOR SENSOR	**Proximity sensor**	**Proximity sensor can be (de)activated:** On Proximity sensor on OF Proximity sensor off **If Proximity sensor is set to 'On', associated settings will become available.**
	Light change	**On user poximity, light changes to:** No change NC Ambient mode AL Functional mode FL
	Display change	**On user poximity, display changes to:** No change NC Status display St
	Door open – light change	**During door opening, light changes to:** No change NC Ambient mode AL Functional mode FL
	Door closed – light change	**When door is closed, light changes to:** No change NC Ambient mode AL Functional mode FL

NIGHT MODE* F	Night mode will dim the light during a set time.	
	Night mode status A	**Night mode can be (de)activated:** On or Off **If Night mode is set to 'On', associated settings will become available.**
	Start Time hours b	**Set the hours of the night mode starting time:** 00 from 00 to 23 hours 23
	Start Time minutes C	**Set the minutes of the night mode starting time:** 00 from 00 to 59 minutes 59
	End Time hours d	**Set the hours of the night mode ending time:** 00 from 00 to 23 hours 23
	End Time minutes E	**Set the minutes of the night mode ending time:** 00 from 00 to 59 minutes 59
	Light dimming F	**Select the light intensity of the night mode:** 80 from 0 to 99 99

NETWORK CONNECTION 6	**WLAN Status** A	**WLAN can be (de)activated:** On WLAN on OF WLAN off
		Switch on the appliance Wireless Network to use the appliance optimally in combination with our **ConnectLife** application.
	Explanation about the Connection Setup can be found in chapter “**Connection setup**”.	
	Connection Setup b	**Connection setup can be activated:** CS Connection setup on, press ✓ to confirm CS ✓ Both will be blinking during setup
		The setup ends automatically if connection was succesfull or after 3 minutes. Please follow the steps in chapter “Connection setup”.

NETWORK CONNECTION 6	**Appliance Pairing** C	**Appliance Pairing can be activated:** AP Appliance pairing on, press ✓ to confirm AP ✓ Both will be blinking during pairing
		The process ends automatcially if pairing was succesfull or after 3 minutes. Appliance can be paired to (additional) user account. Refer to the applicaton for further instructions.
	Unpair All d	**Unpair All can be activated:** UA Appliance UnPair on, press ✓ to confirm YS Are you sure? If YES, press ✓ to confirm
		The process ends automatcially if UnPair was succesfull or after 1 minute.
	Remote control E	**Remote control can be (de)activated:** On Remote control on OF Remote control off
		Remote control must be enabled to be able to control the appliance from paired user accounts.

SYSTEM H	Key lock mode A	**Key lock automatically activate it after:**	
		5	5 minutes
		15	15 minutes
		30	30 minutes
		60	60 minutes
		--	never
	Humidity b	**Humidity can be (de)activated:** On Humidity alarm on OF Humidity alarm off **If Humidity is set to 'On', associated settings will become available.**	
	Humidity box notification C	**Humidity box notification can be (de)activated:** On Humidity box notification on OF Humidity box notification off	

SYSTEM H	Explanation about the charcoal filter can be found in chapter **"Charcoal filter countdown and notification".**		
	Charcoal filter countdown d	**Charcoal filter lifetime in days:**	
		3	First digit of 3 digit number
		65	Second and third digit of 3 digit number
		Charcoal filter lifetime is 365 days. Countdown will show the number of days left until the countdown. If a 'minus' is in front of first digit, amount is showing days after expiration date.	
	Charcoal filter RESET E	**Charcoal filter lifetime RESET after replacing:** rS RESET, press ✓ to confirm	

SYSTEM	**Charcoal filter notification**	**Set the number of days ahead of the end of the countdown, when you wish to receive a notification:**	
		--	no notification
		00	on the day itself
		01	1 day in advance
		07	7 days in advance
		15	15 days in advance
		30	30 days in advance
	Factory RESET	**Appliance can be reset to the factory settings:**	
		rS RESET, press ✓ to confirm	
		YS Are you sure? If YES, press ✓ to confirm	
		If you confirm RESET all personal settings and stored data will be lost.	
	DEMO mode	**DEMO mode can be (de)activated:**	
		On DEMO on, press ✓ to confirm	
		OF DEMO off, press ✓ to confirm	
		Appliance operation will be disabled. For demonstration purposes the display, light, sounds, proximity- and door sensor will be active.	

SYSTEM	**Sabbath mode***	Explanation about the Sabbath mode can be found in the chapter **"Sabbath mode"**.
		Sabbath mode can be (de)activated: On Sabbath mode on, press to confirm OF Sabbath mode off, press to confirm
		Appliance will continue to operate, while extra functions like light, display, sounds, alarms and proximity- and door sensor will be disabled for 72 hours.
		To disable Sabbath mode, press for 3 seconds.
	ECO mode*	Explanation about the ECO mode can be found in chapter **"ECO mode"**.
		ECO mode can be (de)activated: On ECO mode on, press to confirm OF ECO mode off, press to confirm
		Appliance will continue to operate, while extra functions like light, display and proximity- and door sensor will be disabled.
		Press will temporarily activate the display. After 5 minutes of display inactivity, ECO mode will be activated automatically.

Wi-Fi function

Wine climate cabinet reaches its full potential when connected to the cloud because everything can be operated and monitored through **ConnectLife** mobile application on your smart device. Choosing to remote control it from your device makes it easier to navigate through SETTINGS MENU for example, and be connected to features that are unavailble on the appliance interface, like the light

switch control among others. Temperature and humidity values are mirrored at real time. Temperature in the compartment can be changed in the app too, so the door can remain closed.

1. Mobile app

First, download the mobile application with your smart device and create a user account. It is available on Google Play, App Store and AppGallery.

2. Wi-Fi modul activation:

- directly, with a 2 seconds press on Wi-Fi key .
- or go to WLAN STATUS inside NETWORK CONNECTION inside SETTINGS MENU.

Wi-Fi icon	Wi-Fi modul	Cloud service	Remote control
No icon	Off	Off	Off
	On	Not connected	(-)
	On	Connected	Off

3. Connection Setup

After the Wi-Fi modul is activated the appliance is ready to connect to the mobile app.

Wi-Fi icon	Wi-Fi modul	Cloud service	Remote control
	On	Connected	Off

The setup ends automatically if connection is successful or if after 3 minutes the connection has not yet been established.

4. Pairing your appliance

After you are successfully connected to cloud service, pairing option is triggered automatically. Appliance will be paired to your smart application user account.

You can pair multiple user accounts, so you can have have more than one smart device connected to the wine climate cabinet.

Only on your smart device you can see if the pairing has been successful.

Pairing function ends automatically if pairing connection on the cloud is successful or if after 3 minutes the pairing connection has not been successfully established on the cloud.

5. Remote control

After you successfully pair a user to the wine climate cabinet, the appliance is ready to be operated from the mobile app.

Wi-Fi icon	Wi-Fi modul	Cloud service	Remote control
	On	Connected	Enabled

6. Unpair all

By triggering this option appliance removes all paired user accounts. Data and saved settings remain the same inside the appliance.

Unpairing function ends automatically if the unpairing process on the cloud is successful or if after 1 minute the unpairing has not been successful on the cloud.

7. Deactivate Wi-Fi modul:

When you wish to stop operating and monitoring the appliance on remote control, you can turn the Wi-Fi module off the same way you activate it:

- directly, with a 2 seconds press on Wi-Fi key .
- or go to WLAN STATUS inside NETWORK CONNECTION inside SETTINGS MENU.

When the Wi-Fi modul is off, you will not be able to use the mobile app. However, this does not mean you will need to repeat the pairing process next time you turn the Wi-Fi modul on again. Instead, the whole process will be automatic. If it occurs that connection between appliance and mobile cannot be established, please give it some time or unpair and pair again your smart device. If problem presists, contact customer support.

In case of power failure, state of Wi-Fi modul is saved. When power is restored, it will be the same as before disconnection.

Charcoal filter countdown and notification

When the appliance is ‘On’ for the first time, charcoal filter countdown timer is set to 365.

Every 24 hours, when appliance is connected to power supply, 1 day is deducted.

In case of power failure, Charcoal filter lifetime value is saved. When power is restored, it will be the same as before disconnection.

If you change time or date parameter, it will not affect charcoal filter countdown.

With a 2 seconds press on Charcoal filter key , you are redirected to Charcoal filter lifetime inside SETTINGS MENU. Display 'H' shows Charcoal filter lifetime value.

When Charcoal filter notification setting is reached, Charcoal filter key is illuminated.

When Charcoal filter countdown timer is =0, then "**0**" is blinking on display **H**.

When Charcoal filter countdown timer expires, then Charcoal filter key is blinking.

After replacing filter, you have to reset Charcoal filter lifetime.

Sabbath mode

Sabbath mode will be activated for 72h directly after activation. All illuminated features and the display will be temporarily disabled. The cooling system is operating normal. Sabbath mode will be activated every week again on the same time of the same day.

Sabbath mode active phase ends:

- automatically 72 hours after activation,
- with a 3 seconds press on Key lock key .

If any error occurs during Sabbath mode, it won't be showed until Sabbath mode is deactivated.

* Active Sabbath mode overrules ECO mode and Night mode for a maximum of 72 hours.

Eco mode

During ECO mode, the appliance internal illumination and display illumination are adjusted for best energy consumption.

ECO mode is activated after 5 minutes of inactivity on Appliance's Display. Only On/Off key is active. Appliance cooling system is operating normal.

In case of any errors detected, ECO mode ends. Error code is displayed.

In case of any alarms detected, ECO mode ends. Alarm indication is activated. After alarm is confirmed the appliance goes back to Status display. After 5 minutes of inactivity, ECO mode will be activated again.

Defrosting the appliance

- The wine climate cabinet is defrosted automatically. Drops of water will flow through an opening in the rear wall into a tray fitted above the compressor, from where they will evaporate.

Cleaning the appliance

⚠ WARNING!

Switch off the appliance and remove the plug from the socket before you start cleaning it.

⚠ WARNING!

Do not use abrasive cleaning agents, as they can damage the surface.

⚠ WARNING!

Do not remove the rating plate located inside the appliance. The rating plate contains data that you need in case of a repair.

- Before cleaning, remove the bottles from the appliance and store them in a cold place.
- Regularly clean the appliance interior with lukewarm water. If necessary, add a neutral detergent or a special refrigerator detergent to the water. Use a soft cloth to clean all surfaces. Wipe the cleaned parts with a cloth dampened with clean water and dry them thoroughly.
- Do not wash parts of the appliance in a dishwasher as they can be damaged.
- Remove any stains from wooden parts immediately to prevent them from soaking into the wood. Clean the wooden parts with a damp cloth. Make sure the wood is not too wet and leave the parts to dry completely before returning them to the wine cabinet.

Note: Wood is a natural material. Therefore, some stains (especially from red wine) may be hard to remove.

Such stains can be removed by gently rubbing the wood with a very fine sandpaper and then treating the sanded part with wood oil. The substance used to treat the wood should be safe for food contact.

- Clean the glass door with a suitable glass cleaner.
- Clean the gasket with lukewarm water, then wipe it with a soft cloth and dry it thoroughly.
- Regularly clean (using a vacuum cleaner) the ventilation slots on the appliance sides and back. Accumulation of dust on the ventilation slots may result in increased power consumption.

⚠ WARNING!

If you do not intend to use the appliance for a long time, switch it off and disconnect it from the power mains. Empty and clean the appliance, than leave the door ajar. This will prevent the appearance of mould inside the appliance.

Reversing the door opening direction

The direction in which the appliance door opens can be reversed.

In order to safely reverse the door opening direction, at least three people should carry out the procedure described below. The door weighs about 40 kg.

⚠ WARNING!

In order to avoid damaging the floor, use a floor mat or other suitable protection on the floor in front of the appliance. Also, plan for a suitable spot where you will temporarily place the door during the procedure.

Take care not to damage the door gasket. A damaged gasket will negatively affect appliance operation.

⚠ WARNING!

The self-closing hinge could close and damage your fingers. Therefore, please be particularly careful.

⚠ WARNING!

Disconnect the appliance from the power mains before reversing the door opening direction.

Tools required:

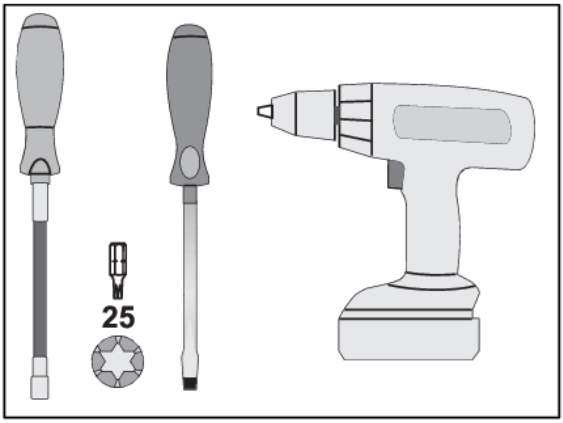

To reverse the door opening direction, proceed as follows:

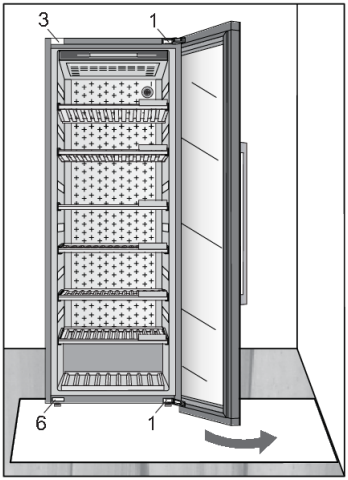

1. Open the appliance door.

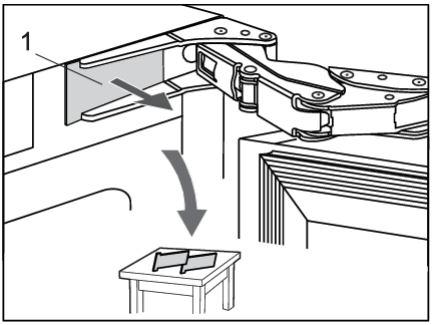

2. Remove the two hinge caps (1) at the top and bottom. Set them aside, as you will need them later on.

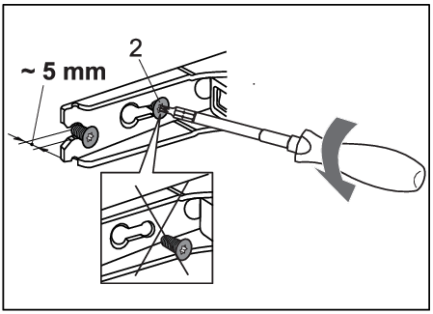

3. Partly (by no more than 5 mm) undo the hinge screws (2) at the top and bottom. Do not completely undo the screws. This way, the door will remain in contact with the housing.

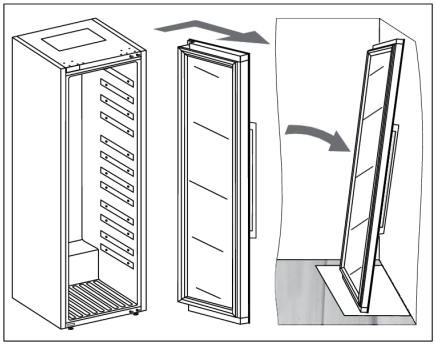

4. Remove the door, complete with the hinges, by moving it in the direction indicated by the arrow. Carefully place the door on the surface prepared for this purpose.

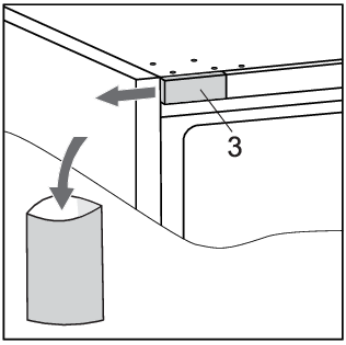

5. Remove the cap (3). Save it (e.g. in the bag with the instruction manual) if you ever decide to reverse the door opening direction back to the original setting.

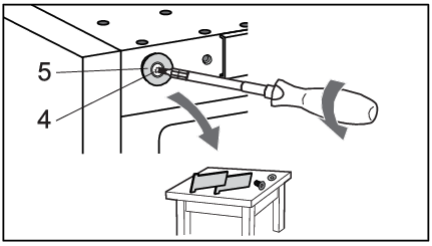

6 Undo the screw (4) and remove the cap (5). Set them aside, as you will need them later on.

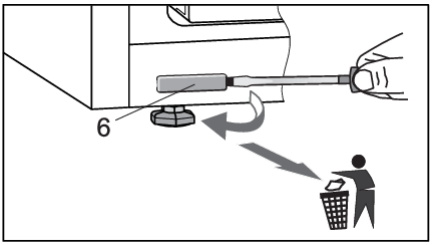

7. Remove the cap (6) and discard into the bin for plastic waste.

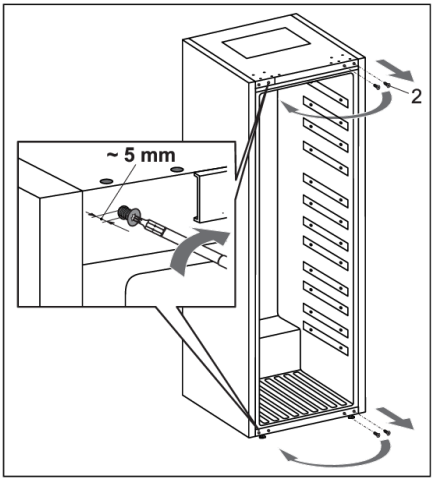

8. Completely undo the screws (2). Then, partly screw them into the holes at the top and bottom on the opposite side of the housing.

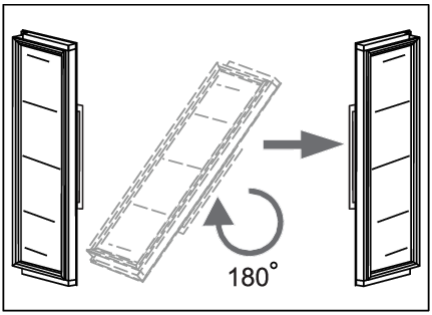

9. Carefully rotate the door by 180 degrees.

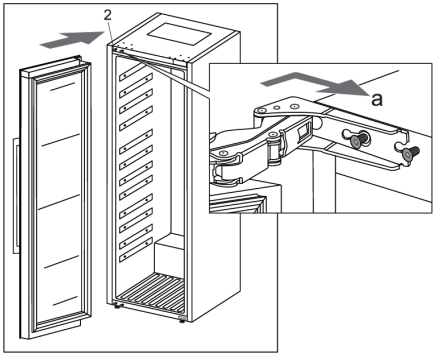

10. Hang the door onto the screws (2) at the top and bottom and slide it in the direction indicated by the arrow (a).

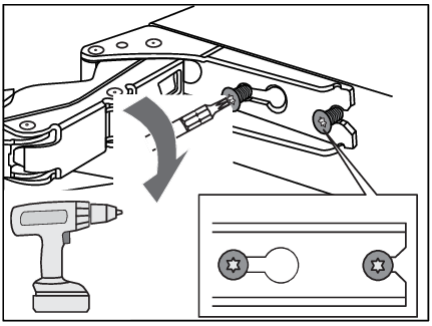

11. Tighten the screws. The screws should be tightened to a torque of 6.2 Nm.

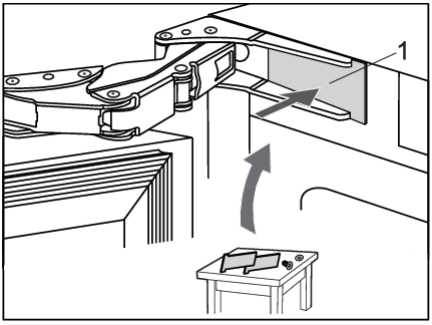

12. Replace the hinge caps (1).

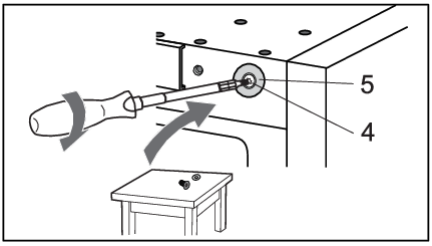

13. On the opposite side from the top hinge, attach the cap (5) using the screw (4).

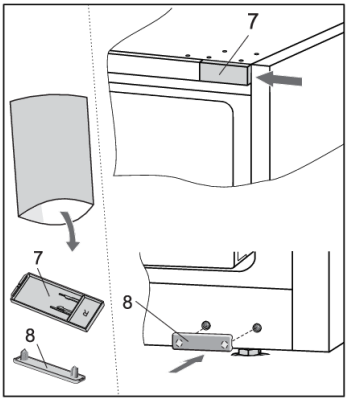

14. Take the caps (7 and 8) from the bag with the instruction manual and install them on the side opposite from the hinges.

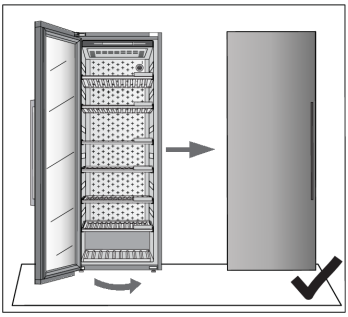

15. Close the door and make sure it is aligned with the housing. The housing side and the edge of the door should be parallel.

Reversing the door opening direction

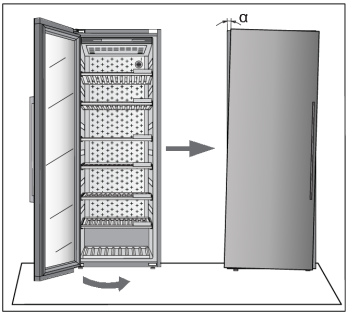

If the door is not aligned with the housing (the angle α is not 0°),

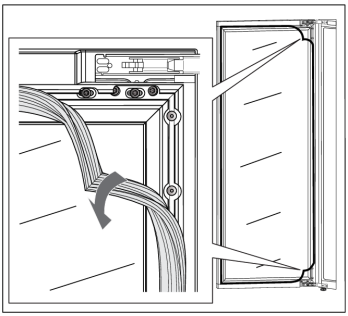

then proceed as follows:

1. Open the door and detach the gasket from its groove in the corners at the top and bottom hinge.

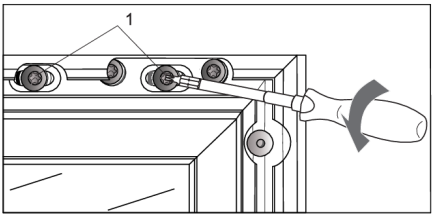

2. Release the screws (1) at the top and bottom. Do not undo them completely!

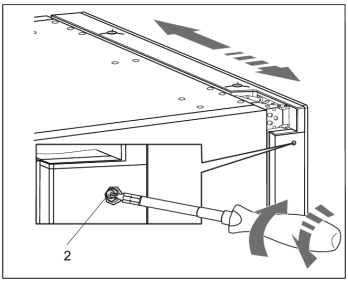

3. Close the door, then rotate the screw (2) at the top and bottom to adjust the door position.

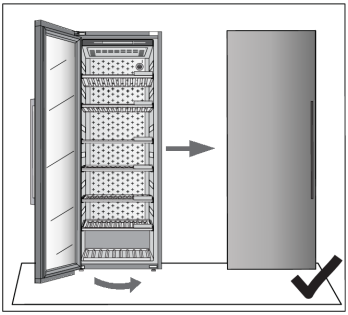

4. Adjust the door position until the edge of the door is parallel to the side of the housing.

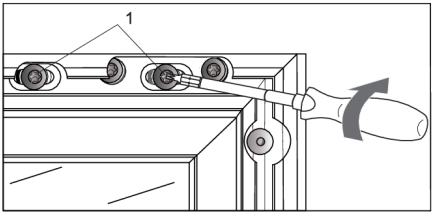

5. When the door edge is parallel to the housing side, open the door again and tighten the screws (1) you released at the start of the door adjustment process.

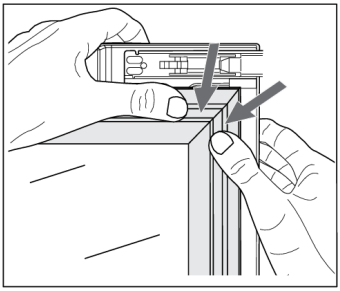

6. Carefully press the gasket back into the groove in the door.

If you have any doubts about whether your appliance is working properly, we recommend to first read suggestions below.

Tips & Tricks

When temperature or humidity in the appliance is out of range an alarm will be triggered.

Alarm sounds and alarm key is blinking on display.

To remove the sound, short press alarm key .

The temperature or humidity will be blinking on the display until it has been recovered.

If the alarm has not been removed and the temperature or humidity has been recovered, the alarm sound will stop and blinking on the display will end.

Temperature out of range

Possible cause	Countermeasures
Frequent and/or long door openings.	Try to minimize opening the door of the wine climate cabinet appliance. Prepare loading plan of large quantities of bottles in advance to minimize the required time for loading. Try to use the **ConnectLife** mobile application as much as possible to change appliance settings.
Recent big changes in temperature settings.	Making larger changes of the temperature settings may take the appliance a few hours to reach new settings.
Introduction of new bottles.	Especially introduction of larger quantities of new bottles to the appliance may take longer for the appliance to reach the set temperature range. If possible, we recommend to introduce already cooled bottles to the appliance. We recommend to let the appliance cool down to the set temperature before introducing the first batch of your wine bottles.
Recent start-up of the appliance.	It may take a few hours for the appliance to cool to the requested setting after being turned on. We recommend to let the appliance cool down to the set temperature before introducing the first batch of your wine bottles.
Extreme ambient temperatures.	Make sure that the appliance is installed in a well ventilated room and is not exposed to extremely high or extremely low temperatures. For detailed appliance installation instructions please refer to the user manual [see chapter “Selecting the location”].

In case none of the above countermeasures helped and the "temperature out of range" warning persists, please contact a service center.

Humidity out of range

Possible cause	Countermeasures
Frequent and/or long door openings.	Try to minimize opening the door of the wine climate cabinet appliance. Prepare loading plan of large quantities of bottles in advance to minimize the required time for loading. Try to use the **ConnectLife** mobile application as much as possible to change appliance settings.
Recent big changes in temperature settings.	Making larger changes of the temperature settings may take the appliance a few hours to reach new settings. Humidity levels in the appliance are strongly dependent on the temperature changes and take longer to stabilize.
Recent start-up of the appliance.	It may take a few hours for the appliance to cool to the requested setting after being turned on. Humidity levels in the appliance are strongly dependent on the temperature changes and take longer to stabilize.
Extreme ambient temperatures and/or humidity levels.	Make sure that the appliance is installed in a well ventilated room and is not exposed to extremely high or extremely low temperatures. Humidity levels in the appliance are strongly dependent on the temperature changes and take longer to stabilize. For detailed appliance installation instructions please refer to the user manual [see chapter “Selecting the location”]. In case of use in ambient with extremely high or extremely low humidity levels you can purchase humidity stabilizer accessory set.

In case none of the above countermeasures helped and the "humidity out of range" warning persists, please contact a service center.

Power failure

Possible cause	Countermeasures
Recent and/or frequent power failure.	If this power cut-outs appear to be frequent, contact professional electrician to check electrical fuses, outlets and appliance's power connecting cable.

Power supply reset

In case of power failure or appliance is unplugged when it is functioning (Appliance-On), compressor operation is blocked for 300 seconds when power is restored.

After power is restored, appliance control mode will be the same as set before disconnection.

Error notifications

If a component inside the appliance is failing, a notification will pop-up.

The notification will display a code. Codes for these errors can be found in the table below.

Error Code	Description	Code shown on Display 'T'	Code shown on Display 'H'
E0	Communication error from power board to user interface electronics.	E0	E0
E1	Wi-Fi module can not turn on.	E	1
E4	Wi-Fi module can not connect to Cloud Service.	E	4
E5	'Hard Pairing' process not successful.	E	5
E6	'Unpair all' process not successful.	E	6
E8	Communication error from user interface electronics to power board.	E8	E8
E9	Door sensor error.	E	9
F1	Appliance's compartment fan error.	F	1
F2	Condenser fan error.	F	2
H1	Appliance's compartment humidity sensor error.	H	1
P1	Proximity sensor error.	P	1
t1	Environment temperature/humidity sensor error.	t	1
t2	Appliance's compartment temperature sensor error.	t	2
t3	Evaporator temperature sensor error.	t	3
U1	Vibration sensor error.	U	1
81	Wi-fi modul error.	8	1

In case there is a communication error between power board and user interface electronics, other errors will not be displayed.

If any error indication on displays 'T' and 'H' is active, then other action on display is not possible.

For that there are, anyway, some exceptions:

- in case of any of alarms is active: alarm key is active (to reset active alarm),
- in case of active Key Lock mode: key lock key is active (for deactivating key lock),
- On/Off key is active, to enter Off mode with a 3 seconds press.

If several different errors are active in the same time, they will be displayed sequentially.

If after 3 hours since the user closed the message, the error is still not resolved, the error message is displayed again.

The exception is error P1 (Proximity sensor), where the user can choose not to display this error anymore. Error itself can not be disabled.

General problems

Problem	Cause/Solution
Appliance cools continuously for a long time.	• The ambient temperature is too high. • The door has been opened for too long or too frequently. • The door does not seal properly (the seal is dirty, the door is misaligned or the seal is damaged, etc.). • A larger quantity of bottles is newly inserted. • Insufficient air circulation around the compressor and condenser. Check that there is sufficient ventilation around the appliance.
Appliance makes a noise.	• The appliance is cooled by a cooling system with a noise-causing compressor. The noise level depends on the installation of the appliance, its correct use and age. • When you connect the appliance to the power supply, the noise made by the compressor or liquid refrigerant may be slightly louder. This does not indicate a fault and has no effect on the service life of the appliance.The appliance will produce more noise for some time. • The appliance may temporarily produce more noise after the door has been opened for too long or too frequently or, there is a large amount of newly inserted bottles. • The appliance may produce more noise when operating in a high temperature environment.
LED light is not working.	Check if LED lighting is turned on. For additional information see chapter »Settings/Light«. You may not try to repair LED lighting. Please contact a service center.

Other display warnings

Warning	Cause/Solution
The door is open:	• The door has been open too long: close the door. • If the warning keeps showing, call the service center to arrange repairs. The appliance operates in a safe mode until it is corrected. The appliance automatically maintains the most suitable temperature.
The humidity is out of range:	The value of humidity in the compartment is outside the permitted limits. Ensure that the appliance is located in in a well-ventilated area and not exposed extremely low or extremely high temperatures. You can find more information regarding possible causes and potential solutions for this notification in section »Tips & Tricks«. In the event that this occurs for a longer period of time since the last intervention on the device (change tobetting, loading bottles, opening doors,…) may mean that moisture sensor is out of order. Contact a service center to correct the error. The appliance will operate in safe mode until repaired by a service technician.
The humidity is below 50%:	We advise to refill humidity box zone to stop the notification.
The temperature is out of range:	The temperature in the compartment is outside the permitted limits. You can find more information regarding possible causes and potential solutions for this notification in section »Tips & Tricks« In the event that this occurs for a longer period of time since the last intervention in the device (change of setting, loading of bottles, opening of doors,…) it may mean that temperature sensor is out of order. Contact a service center to correct the error. The appliance will operate in safe mode until repaired by a service technician. The appliance will automatically maintain the most suitable temperature.
The vibrations are too high:	The detected vibrations of the appliance are outside the permitted limits. Check that the appliance is installed correctly (“Installation and connection”).
After the power is restored – measured temperature is out of range:	After power is restored to the appliance, measured temperature in the appliance is out of range. This means 3°C above or 3°C below the setpoint temperature.
Charcoal filter is expired:	Replace the air filter.

INFORMATION!

When calling a service center, you will have to state the type, model and serial number indicated on the type plate on the inside of the appliance [see chapter “Selecting the location”].

When waiting for a service technician, do not open the appliance door to avoid an unnecessary rise in temperature.

Disposal of packaging and appliance

This appliance is made from sustainable materials. This appliance must be disposed of in a responsible manner at the end of its service life. Contact the local authorities for information about the method.

INFORMATION!

See also the chapter ‘Disposal’ in the Safety instructions.

The packaging of the appliance is recyclable. The following materials may have been used:

- Cardboard.
- Polyethylene foil (PE).
- CFC-free polystyrene (hard PS foam).

These materials must be disposed of in a responsible manner and in accordance with government regulations.

The appliance is marked with a crossed out wheeled bin symbol to draw your attention to the requirement for the separate disposal of domestic electrical appliances. This means that the appliance may not be disposed of in unsorted household waste at the end of its service life. The appliance must be taken to a special municipal waste processing location for separated waste or to a dealer who provides this service.

Collecting and disposing of domestic appliances separately avoids detrimental consequences for humans and the environment. This ensures that the materials used to make the appliance can be recovered and that substantial savings in the use of energy and raw materials can be achieved.

Declaration of conformity

We hereby declare that our products conform to the applicable European Directives, Regulations and requirements, as well as all requirements in the standards to which reference is made.

ASKO

Inspired by Scandinavia

The instructions for use can also be found on our website: www.asko.com

FSC
www.fsc.org
MIX
Paper from responsible sources
FSC® C114278

849467-a5

CE